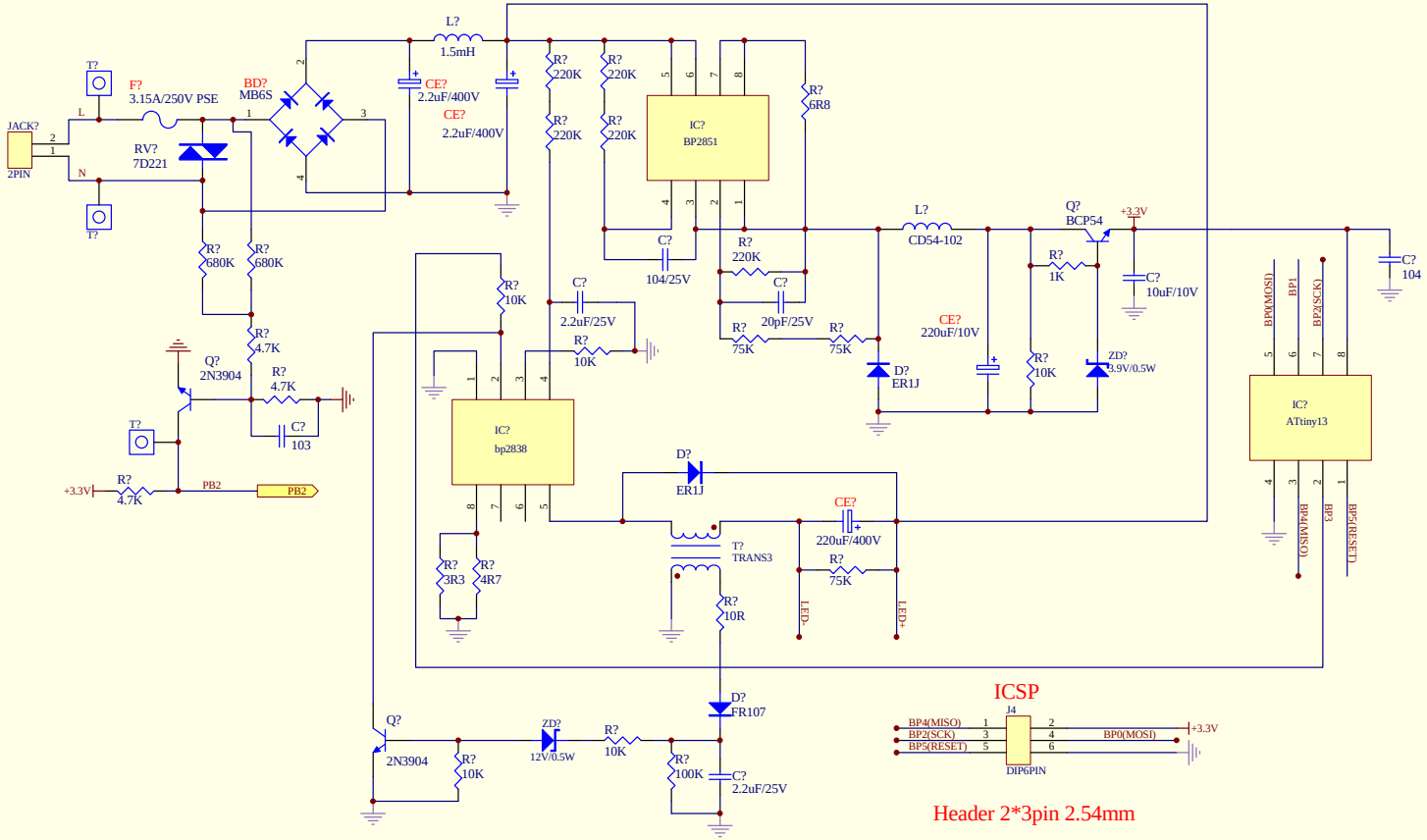

Title		
Size B	Number	Revision
Date: 21-Jun-2015	Sheet of	
File: E:\新建文件夹\备份\佳景\调光电源\DIM.DDB	Drawn By:	